SPLIT-TYPE ROOM AIR CONDITIONER

Owner's Manual

CUSTOM™ COMFORT

CCOXHBFM09
CCOXHBFM12
CCOXHBFM18

IMPORTANT NOTE:

Read this manual carefully before installing or operating your new air conditioning unit. Make sure to save this manual for future reference.

CONTENTS

SAFETY PRECAUTIONS 02
OPERATION INSTRUCTIONS 12
CARE AND MAINTENANCE 15
TROUBLESHOOTING 17

SAFETY PRECAUTIONS

It is really important that you read Safety Precautions Before Operation and Installation. Incorrect installation due to ignoring instructions can cause serious damage or injury. The seriousness of potential damage or injuries is classified as either a WARNING or CAUTION.

Explanation of Symbols

WARNING

This symbol indicates the possibility of personnel injury or loss of life.

CAUTION

This symbol indicates the possibility of property damage or serious consequences.

⚠ WARNING

This appliance is not intended for use by persons(including children) with reduced physical, sensory or mental capabilities, or lack of experience and knowledge, unless they have been given supervision or instruction concerning use of the appliance by a person responsible for their safety. Children should be supervised to ensure that they do not play with the appliance.

⚠ WARNING FOR PRODUCT USE

- Turn off the air conditioner and disconnect the power before performing any cleaning, installation or repairing. Failure to do so can cause electric shock.
- If an abnormal situation arises (like a burning smell), immediately turn off the unit and disconnect the power. Call your dealer for instructions to avoid electric shock, fire or injury.
- Do not insert fingers, rods or other objects into the air inlet or outlet. This may cause injury, since the fan may be rotating at high speeds.
- Do not use flammable sprays such as hair spray, lacquer or paint near the unit. This may cause fire or combustion.
- Do not operate the air conditioner in places near or around combustible gases. Emitted gas may collect around the unit and cause explosion.
- Do not operate your air conditioner in a wet room such as a bathroom or laundry room. Too much exposure to water can cause electrical components to short circuit.
- Do not expose your body directly to cool air for a prolonged period of time.
- Do not allow children to play with the air conditioner. Children must be supervised around the unit at all times.
- If the air conditioner is used together with burners or other heating devices, thoroughly ventilate the room to avoid oxygen deficiency.
- In certain functional environments, such as kitchens, server rooms, etc., the use of specially designed air-conditioning units is highly recommended.

⚠ ELECTRICAL WARNINGS

- Only use the specified wire. If the wire is damaged, it must be replaced by the manufacturer, its service agent or similarly qualified persons in order to avoid a hazard.
- The product must be properly grounded at the time of installation, or electric shock may occur.
- For all electrical work, follow all local and national wiring standards, regulations, and the Installation Manual. Connect cables tightly, and clamp them securely to prevent external forces from damaging the terminal. Improper electrical connections can overheat and cause fire, and may also cause shock. All electrical connections must be made according to the Electrical Connection Diagram located on the panels of the indoor and outdoor units.
- All wiring must be properly arranged to ensure that the control board cover can close properly. If the control board cover is not closed properly, it can lead to corrosion and cause the connection points on the terminal to heat up, catch fire, or cause electric shock.
- Disconnection must be incorporated in the fixed wiring in accordance with the wiring rules.
- Do not share the electrical outlet with other appliances. Improper or insufficient power supply can cause fire or electric shock.
- If connecting power to fixed wiring, an all-pole disconnection device which has at least 3mm clearances in all poles, and have a leakage current that may exceed 10mA, the residual current device (RCD) having a rated residual operating current not exceeding 30mA, and disconnection must be incorporated in the fixed wiring in accordance with the wiring rules.

CLEANING AND MAINTENANCE WARNINGS

- Turn off the device and disconnect the power before cleaning. Failure to do so can cause electric shock.
- Do not clean the air conditioner with excessive amounts of water.
- Do not clean the air conditioner with combustible cleaning agents. Combustible cleaning agents can cause fire or deformation.

⚠ CAUTION

- Turn off the air conditioner and disconnect the power if you are not going to use it for a long time.
- Turn off and unplug the unit during storms.
- Make sure that water condensation can drain unhindered from the unit.
- Do not operate the air conditioner with wet hands. This may cause electric shock.
- Do not use device for any other purpose than its intended use.
- Do not climb onto or place objects on top of the outdoor unit.
- Do not allow the air conditioner to operate for long periods of time with doors or windows open, or if the humidity is very high.

⚠ WARNING FOR USING FLAMMABLE REFRIGERANTS

- Do not use means to accelerate the defrosting process or to clean, other than those recommended by the manufacturer.
- The appliance shall be stored in a room without continuously operating ignition sources (for example: open flames, an operating gas appliance or an operating electric heater).
- Do not pierce or burn.
- Be aware that refrigerants may not contain an odour.
- LEAK DETECTION SYSTEM installed. Unit must be powered except for service. For the unit with refrigerant sensor, when the refrigerant sensor detects refrigerant leakage, the indoor unit will display a error code and emit a buzzing sound, the compressor of outdoor unit will immediately stop, and the indoor fan will start running. The service life of the refrigerant sensor is 15 years. When the refrigerant sensor malfunctions, the indoor unit will display the error code “FHCC”. The refrigerant sensor can not be repaired and can only be replaced by the manufacture. It shall only be replaced with the sensor specified by the manufacture.

For R454B refrigerant charge amount and minimum room area:

The machine you purchased may be one of the types in the table below. The indoor and outdoor units are designed to be used together. Please check the machine you purchased. The height of the room cannot be less then 7.3ft/2.2m, and the minimum room area of operating or storage should be as specified in the following table:

Model	Indoor unit	Outdoor unit
09K	CCOXHBFM09	CCOXHBSZ09HP
12K	CCOXHBFM12	CCOXHBSZ12HP
16K	CCOXHBFM18	CCOXHBSZ17HP

A_{min} [ft²/m²]	h_{inst}[ft/m]	
m_c or m_{REL} [oz/kg]	0	0.33~3.93 0.1~1.2
⩽62.6/1.776	12/1.10	
63.4/1.8	60/5.53	60/5.53
70.5/2.0	67/6.15	67/6.15
77.5/2.2	73/6.76	73/6.76
84.6/2.4	80/7.38	80/7.38
91.7/2.6	86/7.99	86/7.99
98.7/2.8	93/8.60	93/8.60
105.8/3.0	100/9.22	100/9.22
112.8/3.2	106/9.83	106/9.83
119.9/3.4	113/10.45	113/10.45
126.9/3.6	120/11.06	120/11.06
134.0/3.8	126/11.68	126/11.68
141.0/4.0	133/12.29	133/12.29
148.1/4.2	139/12.90	139/12.90
155.1/4.4	146/13.52	146/13.52
162.2/4.6	153/14.13	153/14.13
169.2/4.8	159/14.75	159/14.75
176.3/5.0	166/15.36	166/15.36
Area formula	**A_{min}** is the required minimum room area in ft²/m² **m_c** is the actual refrigerant charge in the system in oz/kg **m_{REL}** is the refrigerant releaseable charge in oz/kg **h_{inst}** is the height of the bottom of the appliance relative to the floor of the room after installation. **WARNING:** The minimum room area or minimum room area of conditioned space is based on releasable charge and total system refrigerant charge.	

When the unit detects a refrigerant leak, the minimum airflow of the indoor unit is as follows:

Model	9K	12K	16K
Nominal air volume	442CFM (750m³/h)	442CFM (750m³/h)	500CFM (850m³/h)

1. Installation(where refrigerant pipes are allowed)
   - Any person who is involved with working on or breaking into a refrigerant circuit should hold a current valid certificate from an industry-accredited assessment authority, which authorises their competence to handle refrigerants safely in accordance with an industry recognised assessment specification.
   - Maintenance and repair requiring the assistance of other skilled personnel shall be carried out under the supervision of the person competent in the use of flammable refrigerants.
   - That the installation of pipe-work shall be kept to a minimum.
   - That pipe-work shall be protected from physical damage.
   - Where refrigerant pipes shall be compliance with national gas regulations.
   - That mechanical connections shall be accessible for maintenance purposes.
   - Be more careful that foreign matter(oil, water,etc) does not enter the piping. Also, when storing the piping, securely seal the opening by pinching, taping, etc.
   - Appliance shall be stored in a well ventilated area where the room size corresponds to the room area as specifiec for operation.
   - Appliance shall be stored in a well ventilated area where the room size corresponds to the room area as specifiec for operation.
   - Joints shall be tested with detection equipment with a capability of 5 g/year of refrigerant or better, with the equipment in standstill and under operation or under a pressure of at least these standstill or operation conditions after installation. Detachable joints shall NOT be used in the indoor side of the unit (brazed, welded joint could be used).
   - In cases that require mechanical ventilation, ventilation openings shall be kept clear of obstruction.

2. When a FLAMMABLE REFRIGERANT is used, the requirements for installation space of appliance and /or ventilation requirements are determined according to
   - the mass charge amount(M) used in the appliance,
   - the installation location,
   - the type of ventilation of the location or of the appliance.
   - piping material, pipe routing, and installation shall include protection from physical damage in operation and service, and be in compliance with national and local codes and standards, such as ASHRAE 15, IAPMO Uniform Mechanical Code, ICC International Mechanical Code, or CSA B52. All field joints shall be accessible for inspection prior to being covered or enclosed.
   - that protection devices, piping, and fittings shall be protected as far as possible against adverse environmental effects, for example, the danger of water collecting and freezing in relief pipes or the accumulation of dirt and debris;
   - that piping in refrigeration systems shall be so designed and installed to minimize the likelihood of hydraulic shock damaging the system;
   - that steel pipes and components shall be protected against corrosion with a rustproof coating before applying any insulation;
   - that precautions shall be taken to avoid excessive vibration or pulsation;
   - the minimum floor area of the room shall be mentioned in the form of a table or a single figure without reference to a formula;
   - after completion of field piping for split systems, the field pipework shall be pressure tested with an inert gas and then vacuum tested prior to refrigerant charging, according to the following requirements:

   a. The minimum test pressure for the low side of the system shall be the low side design pressure and the minimum test pressure for the high side of the system shall be the high side design pressure, unless the high side of the system can not be isolated from the low side of the system in which case the entire system shall be pressure tested to the low side design pressure.
   b. The test pressure after removal of pressure source shall be maintained for at least 1 h with no decrease of pressure indicated by the test gauge, with test gauge resolution not exceeding 5% of the test pressure.

c. During the evacuation test, after achieving a vacuum level specified in the manual or less, the refrigeration system shall be isolated from the vacuum pump and the pressure shall not rise above 1500 microns within 10 min. The vacuum pressure level shall be specified in the manual, and shall be the lessor of 500 microns or the value required for compliance with national and local codes and standards, which may vary between residential, commercial,and industrial buildings.

-- field-made refrigerant joints indoors shall be tightness tested according to the following requirements: The test method shall have a sensitivity of 5 grams per year of refrigerant or better under a pressure of at least 0,25 times the maximum allowable pressure. No leak shall be detected.

-- Any servicing shall be performed only as recommended by the manufacturer.

3 . Qualification of workers

Any maintenance, service and repair operations must be required qualification of the working personnel. Every working procedure that affects safety means shall only be carried out by competent persons that joined the training and achieved competence should be documented by a certificate. The training of these procedures is carried out by national training organizations or manufacturers that are accredited to teach the relevant national competency standards that may be set in legislation. All training shall follow the ANNEX HH requirements of UL 60335-2-40 4th Edition.

Examples for such working procedures are:

- breaking into the refrigerating circuit;
- opening of sealed components;
- opening of ventilated enclosures.

Information Servicing

1. Checks to the area

Prior to beginning work on systems containing flammable refrigerants, safety checks are necessary to ensure that the risk of ignition is minimised. For repair to the refrigerating system, the following precautions shall be complied with prior to conducting work on the system.

2. Work procedure

Works shall be undertaken under a controlled procedure so as to minimise the risk of a flammable gas or vapour being present while the work is being performed.

3. General work area

All maintenance staff and others working in the local area shall be instructed on the nature of work being carried out. work in confined sapces shall be avoided.

4. Checking for presence of refrigerant

The area shall be checked with an appropriate refrigerant detector prior to and during work, to ensure the technician is aware of potentially flammable atmospheres. Ensure that the leak detection equipment being used is suitable for use with flammable refrigerants, i.e. no sparking, adequately sealed or intrinsically safe.

5. Presence of fire extinguisher

If any hot work is to be conducted on the refrigeration equipment or any associated parts, appropriate fire extinguishing equipment shall be available to hand. Have a dry power or CO_2 fire extinguisher adjacent to the charging area.

6. No ignition sources
No person carrying out work in relation to a REFRIGERATING SYSTEM which involves exposing any pipe work shall use any sources of ignition in such a manner that it may lead to the risk of fire or explosion. All possible ignition sources, including cigarette smoking, should be kept sufficiently far away from the site of installation, repairing, removing and disposal, during which refrigerant can possibly be released to the surrounding space. Prior to work taking place, the area around the equipment is to be surveyed to make sure that there are no flammable hazards or ignition risks. “No Smoking” signs shall be displayed.

7. Ventilated area
Ensure that the area is in the open or that it it adequately ventilated before breaking into the system or conducting any hot work. A degree of ventilation shall continue during the period that the work is carried out. The ventilation should safely disperse any released refrigerant and preferably expel it externally into the atmosphere.

8. Checks to the refrigeration equipment
Where electrical components are being changed, they shall be fit for the purpose and to the correct specification. At all times the manufacturer’s maintenance and service guidelines shall be followed. If in doubt consult the manufacturer’s technical department for assistance. The following checks shall be applied to installations using FLAMMABLE REFRIGERANTS:

- the actual refrigerant charge is in accordance with the room size within which the refrigerant containing parts are installed;
- the ventilation machinery and outlets are operating adequately and are not obstructed;
- if an indirect refrigerating circuit is being used, the secondary circuits shall be checked for the presence of refrigerant;
- marking to the equipment continues to be visible and legible, marking and signs that are illegible shall be corrected;
- refrigeration pipe or components are installed in a position where they are unlikely to be exposed to any substance which may corrode refrigerant containing components, unless the components are constructed of materials which are inherently resistant to being corroded or are suitably protected against being so corroded.

9. Checks to electrical devices
Repair and maintenance to electrical components shall include initial safety checks and component inspection procedures. If a fault exists that could compromise safety, then no electrical supply shall be connected to the circuit until it is satisfactorily dealt with. If the fault cannot be corrected immediately but it is necessary to continue operation, and adequate temporary solution shall be used. This shall be reported to the owner of the equipment so all parties are advised.
Initial safety checks shall include:

- that capacitors are discharged: this shall be done in a safe manner to avoid possibility of sparking;
- that there no live electrical components and wiring are exposed while charging, recovering or purging the system;
- that there is continuity of earth bonding.

10. Sealed electrical components shall be replaced if it's damage.

11. Intrinsically safe components must be replaced if it's damage.

12. Cabling

Check that cabling will not be subject to wear, corrosion, excessive pressure, vibration, sharp edges or any other adverse environmental effects. The check shall also take into account the effects of aging or continual vibration from sources such as compressors or fans.

13. Detection of flammable refrigerants

Under no circumstances shall potential sources of ignition be used in the searching for or detection of refrigerant leaks. A halide torch(or any other detector using a naked flame) shall not be used.

The following leak detection methods are deemed acceptable for refrigerant systems. Electronic leak detectors may be used to detect refrigerant leaks but, in the case of FLAMMABLE REFRIGERANTS, the sensitivity may not be adequate, or may need re-calibration. (Detection equipment shall be calibrated in a refrigerant-free area.) Ensure that the detector is not a potential source of ignition and is suitable for the refrigerant used. Leak detection equipment shall be set at a percentage of the LFL of the refrigerant and shall be calibrated to the refrigerant employed, and the appropriate percentage of gas (25 % maximum) is confirmed.

Leak detection fluids are also suitable for use with most refrigerants but the use of detergents containing chlorine shall be avoided as the chlorine may react with the refrigerant and corrode the copper pipe-work.

NOTE Examples of leak detection fluids are

- bubble method,
- fluorescent method agents.

If a leak is suspected, all naked flames shall be removed/extinguished.

If a leakage of refrigerant is found which requires brazing, all of the refrigerant shall be recovered from the system, or isolated (by means of shut off valves) in a part of the system remote from the leak. See the following instructions of removal of refrigerant.

14. Removal and evacuation

When breaking into the refrigerant circuit to make repairs - or for any other purpose conventional procedures shall be used. However, for flammable refrigerants it is important that best practice be followed, since flammability is a consideration.

The following procedure shall be adhered to:

- safely remove refrigerant following local and national regulations;
- evacuate;
- purge the circuit with inert gas (optional for A2L);
- evacuate (optional for A2L);
- continuously flush or purge with inert gas when using flame to open circuit; and open the circuit.

The refrigerant charge shall be recovered into the correct recovery cylinders if venting is not allowed by local and national codes. For appliances containing flammable refrigerants, the system shall be purged with oxygen-free nitrogen to render the appliance safe for flammable refrigerants. This process might need to be repeated several times. Compressed air or oxygen shall not be used for purging refrigerant systems.

For appliances containing flammable refrigerants, refrigerants purging shall be achieved by breaking the vacuum in the system with oxygen-free nitrogen and continuing to fill until the working pressure is achieved, then venting to atmosphere, and finally pulling down to a vacuum (optional for A2L). This process shall be repeated until no refrigerant is within thesystem (optional for A2L). When the final oxygen-free nitrogen charge is used, the system shall be vented down to atmospheric pressure to enable work to take place.

The outlet for the vacuum pump shall not be close to any potential ignition sources, and ventilation shall be available.

15. Charging procedures

In addition to conventional charging procedures, the following requirements shall be followed:

- Works shall be undertaken with appropriate tools only (In case of uncertainty, please consult the manufacturer of the tools for use with flammable refrigerants)
- Ensure that contamination of different refrigerants does not occur when using charging equipment. Hoses or lines shall be as short as possible to minimize the amount of refrigerant contained in them.
- Cylinders shall be kept upright.
- Ensure that the refrigeration system is earthed prior to charging the system with refrigerant.
- Label the system when charging is complete(if not already).
- Extreme care shall be taken not to overfill the refrigeration system.
- Prior to recharging the system it shall be pressure tested with oxygen free nitrogen(OFN). The system shall be leak tested on completion of charging but prior to commissioning. A follow up leak test shall be carried out prior to leaving the site.

16. Decommissioning

Before carrying out this procedure, it is essential that the technician is completely familiar with the equipment and all its detail. It is recommended good practice that all refrigerants are recovered safely. Prior to the task being carried out, an oil and refrigerant sample shall be taken in case analysis is required prior to re-use of recovered refrigerant. It is essential that electrical power is available before the task is commenced.

a) Become familiar with the equipment and its operation.
b) Isolate system electrically
c) Before attempting the procedure ensure that:

- mechanical handling equipment is available, if required, for handling refrigerant cylinders;
- all personal protetive equipment is available and being used correctly;
- the recovery process is supervised at all times by a competent person;
- recovery equipment and cylinders conform to the appropriate standards.

d) Pump down refrigerant system, if possible.
e) If a vacuum is not possible, make a manifold so that refrigerant can be removed from various parts of the system.
f) Make sure that cylinder is situated on the scales before recovery takes place.
g)Start the recovery machine and operate in accordance with instructions.
h)Do not overfill cylinders (no more than 80 % volume liquid charge)
i) Do not exceed the maximum working pressure of the cylinder, even temporarily.
j) When the cylinders have been filled correctly and the process completed, make sure that the cylinders and the equipment are removed from site promptly and all isolation valves on the equipment are closed off.
k) Recovered refrigerant shall not be charged into another refrigeration system unless it has been cleaned and checked.

17. Labelling

Equipment shall be labelled stating that it has been de-commissioned and emptied of refrigerant. The label shall be dated and signed. For appliances containing FLAMMABLE REFRIGERANTS, ensure that there are labels on the equipment stating the equipment contains FLAMMABLE REFRIGERANT.

18. Recovery

When removing refrigerant from a system, either for servicing or decommissioning, it is recommended good practice that all refrigerants are removed safely.
When transferring refrigerant into cylinders, ensure that only appropriate refrigerant recovery cylinders are employed. Ensure that the correct number of cylinders for holding the total system charge is available. All cylinders to be used are designated

for the recovered refrigerant and labelled for that refrigerant (i. e. special cylinders for the recovery of refrigerant). Cylinders shall be complete with pressure-relief valve and associated shut-off valves in good working order. Empty recovery cylinders are evacuated and, if possible,cooled before recovery occurs.
The recovery equipment shall be in good working order with a set of instructions concerning the equipment that is at hand and shall be suitable for the recovery of the flammable refrigerant. If in doubt, the manufacturer should be consulted. In addition, a set of calibrated weighing scales shall be available and in good working order. Hoses shall be complete with leak-free disconnect couplings and in good condition.
The recovered refrigerant shall be processed according to local legislation in the correct recovery cylinder, and the relevant waste transfer note arranged. Do not mix refrigerants in recovery units and especially not in cylinders.
If compressors or compressor oils are to be removed, ensure that they have been evacuated to an acceptable level to make certain that flammable refrigerant does not remain within the lubricant. The compressor body shall not be heated by an open flame or other ignition sources to accelerate this process. When oil is drained from a system, it shall be carried out safely.

19. Transportation, marking and storage for units

1. Transport of equipment containing flammable refrigerants
   Compliance with the transport regulations.
2. Marking of equipment using signs
   Compliance with local regulations.
3. Disposal of equipment using flammable refrigerants
   Compliance with national regulations.
4. Storage of equipment/appliances
   The storage of equipment should be in accordance with the manufacturer's instructions.
5. Storage of packed (unsold) equipment
   Storage package protection should be constructed such that mechanical damage to the equipment inside the package will not cause a leak of the refrigerant charge. The maximum number of pieces of equipment permitted to be stored together will be determined by local regulations.

Explanation of symbols displayed on the indoor unit or outdoor unit

	**WARNING**	This symbol shows that this appliance used a flammable refrigerant. If the refrigerant is leaked and exposed to an external ignition source, there is a risk of fire.
	**CAUTION**	This symbol shows that the operation manual should be read carefully.
	**CAUTION**	This symbol shows that a service personnel should be handling this equipment with reference to the installation manual.
	**CAUTION**	
	**CAUTION**	This symbol shows that information is available such as the operating manual or installation manual.

OPERATION INSTRUCTIONS

NOTE

- This display panel on the indoor unit can be used to operate the unit in case the remote control has been misplaced or is out of batteries.

Indoor Unit Display

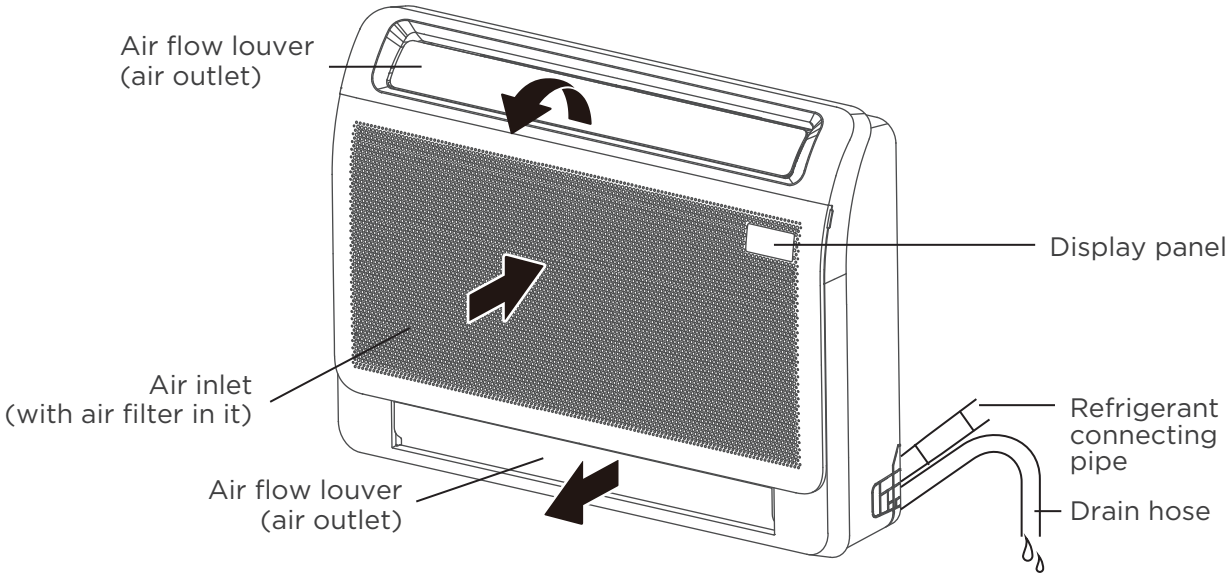

Display panel

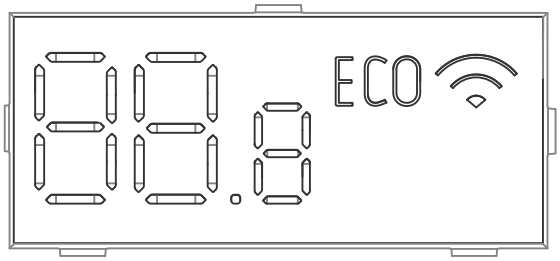

88.8 Displays temperature and Error codes.

"dF" When defrosting (for model B cooling & heating units).

"ON" For 3 seconds when:

- TIMER ON is set.
- SWING or SILENCE is turned on.

"OF" For 3 seconds when:

- TIMER OFF is set.
- SWING or SILENCE is turned off.

"CL" When Active Clean feature is turned on.

"FP" When 46°F/8°C heating feature is turned on.

ECO When ECO function is activated.

When Wireless Control feature is activated.

Features

NOTE

Every time the air conditioner is powered on, a buzzing sound will be heard to indicate that the product has been powered on normally. If there is no sound, it is possible that the unit is abnormal. Please power on again or check the circuit.
The actual functions are subject to the product you purchased, please check the indoor display and remote control of your AC. See the <Remote Controller Manual> for more features.

Default Setting

When the air conditioner restarts after a power failure, it will default to the factory settings (AUTO mode, AUTO fan, 24°C (76°F)). This may cause inconsistencies on the remote control and unit panel. Use your remote control to update the status.

Auto-Restart

In case of power failure, the system will immediately stop. When power returns, the Operation light on the indoor unit will flash. To restart the unit, press the ON/OFF button on the remote control. If the system has an auto restart function, the unit will restart using the same settings.

When the outdoor temperature is below zero, the electric heating belt of the outdoor unit chassis is used for ice melting, without defrosting.

Refrigerant Leakage Detection

- When the system detects a malfunction of the refrigerant, the indoor unit will automatically display the following error codes:
  "EL0C (System lacks refrigerant)" ,
  "EHC1 (Refrigerant sensor detects leakage)",
  "EHC2 (Working condition of the refrigerant sensor is out of range and leakage is detected)",
  "EHC3 (Working condition of the refrigerant sensor is out of range)", or
  "ECC1 (Other indoor unit refrigerant sensor detects leakage (Multi-zone)".
- When "EHC1" or "EHC2" error occurs, the buzzer will continue to beep for 5 to 6 minutes before stopping. You can also press any button on the remote controller to stop the buzzer.

Louver Angle Memory Function

When the unit restarts after a power failure, the angle of the horizontal louvers will automatically return to the previous position.
The angle of the horizontal louver should not be set too small as condensation may form and drip into the machine. To reset the louver, press the manual button, which will reset the horizontal louver settings.

Heat exchanger dust removal function:

This feature helps keep the outdoor coil cleaner and may extend the duration between regular maintenance intervals depending on local conditions. When the unit is turned off, a 10 seconds delay occours then the outdoor fan runs in reverse rotation for 70 seconds to blow off loose accumulated dust and debris.

Adjusting Air Flow Direction

- **Swing Function setting :**
  While the unit is on , use the swing button on remote control to set the direction of air flow. please refer to the section of Remote control operations for details.

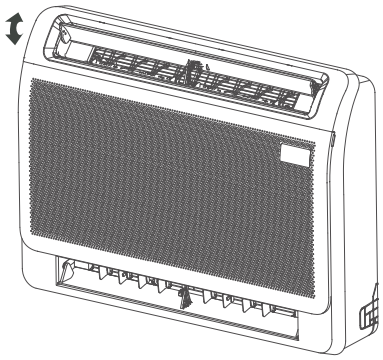

- **Manual operation(cooling feature)**
  Adjust the louver downwards (horizontally).

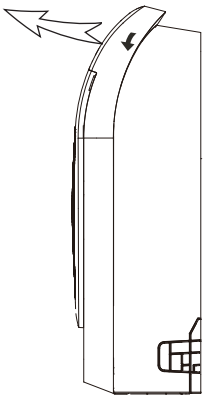

- **Manual operation(heating feature)**
  Adjust the louver vertically.

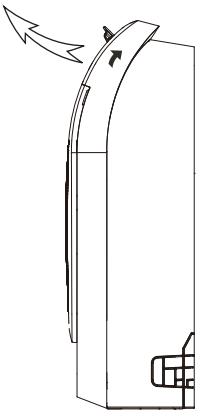

⚠ CAUTION

Do not try to adjust the horizontal louver by hand. This may cause damage the mechanism and result in condensation forming on the air outlets.

- **Lower air louver switch setting**
  Under the condition of meeting the ambient temperature, the lower air louver can be opened when the unit is turned on.
  To select whether the lower air louver is on or off, use the button on the electric control box. Within 10 minutes of power-on, press it for 5 seconds to enter the mode in standby state. Press it to open or close the lower air louver.

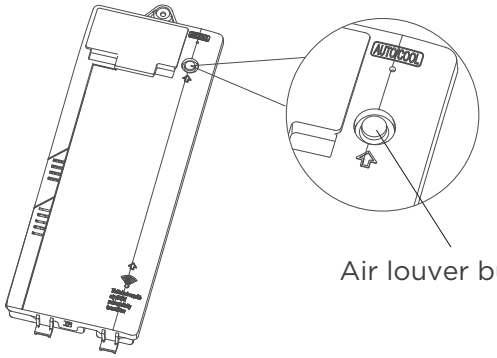

Air louver button

Electric control box

NOTE: During the setting process, the display panel displays the switch status of the lower air louver.
on - open
of - closed

CARE AND MAINTENANCE

⚠ CAUTION

- The cooling efficiency of your unit and your health would be damaged for the glogged AC, Make sure to clean the filter every two weeks.
- Always **TURN OFF** your AC system and disconnect its power supply before cleaning or maintenance.
- **Do not** touch air freshening (Plasma) filter at least 10 minutes after turning off the unit.
- Only use a soft, dry cloth to wipe the unit clean. You can use a cloth soaked in warm water to wipe it clean if the unit is especially dirty.
- Do not use chemicals or chemically treated cloths to clean the unit
- Do not use benzene, paint thinner, polishing powder or other solvents to clean the unit. They can cause the plastic surface to crack or deform.
- Do not use water hotter than 40°C (104°F) to clean the front panel. This can cause the panel to deform or become discolored.

Cleaning Your Indoor Unit(Air Filter)

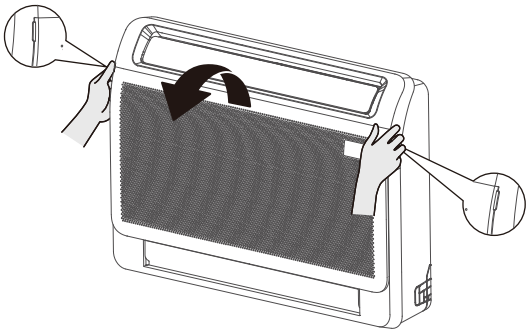

Step 1:

Pull the left and right handles of the front panel, pull the panel outward, and open the panel.

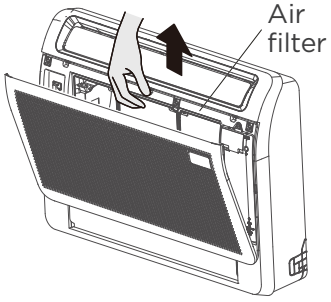

Step 2:

Remove the air filter.

Press the claws on the right and left sides of the air filter down slightly, then pull upward.

⚠ WARNING

Removing and cleaning the filter can be dangerous. Removal and maintenance must be performed by a certified technician.

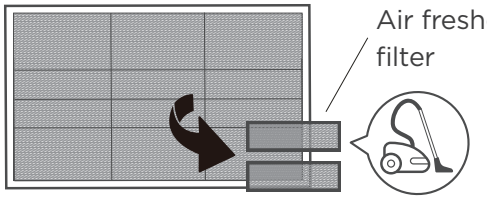

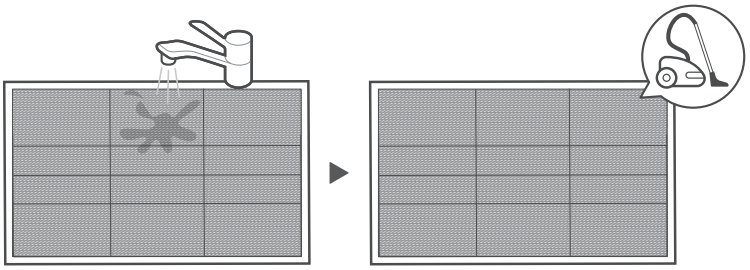

If using water, the inlet side should face down and away from the water stream.

If using a vacuum cleaner, the inlet side should face the vacuum.

Step 3:

Hold the tabs of the frame,and remove the 4 claws. (The special function filter can be washed with water once every 6 months. It is recommended that you replace it once every 3 years.)

Step 4:

Clean the air filter by vacuuming the surface or washing it in warm water with mild detergent.

Rinse the filter with clean water and allow it to air-dry. DO NOT let the filter dry in direct sunlight.

Reinstall the filter.

⚠ CAUTION

- Before changing the filter or cleaning, turn off the unit and disconnect its power supply.
- When removing filter, do not touch metal parts in the unit. The sharp metal edges can cut you.
- Do not use water to clean the inside of the indoor unit. This can destroy insulation and cause electrical shock.
- Do not expose filter to direct sunlight when drying. This can shrink the filter.
- Any maintenance and cleaning of outdoor unit should be performed by an authorized dealer or a licensed service provider.
- Any unit repairs should be performed by an authorized dealer or a licensed service provider.

Replace internal parts

1. Pull the left and right handles of the front panel , pull the panel outward, and open the panel.
2. Remove the 7 screws on the face frame.

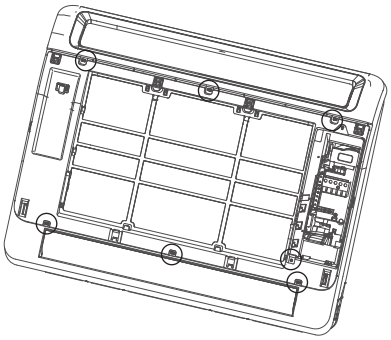

3. Buckle up the snap indicated by the arrow and remove the face frame.

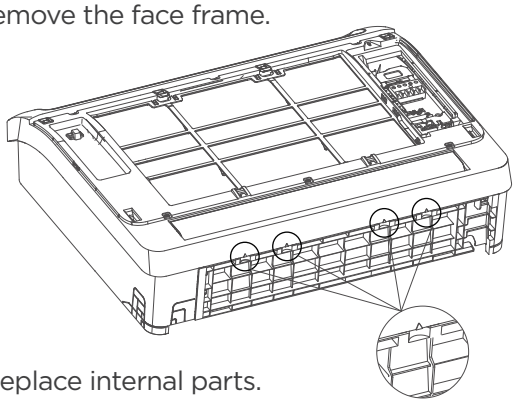

4. Replace internal parts.
5. Install the face frame and panel parts.

Maintenance your AC.

Maintenance – Long Periods of Non-Use

If you plan not to use your air conditioner for an extended period of time, do the following:

Clean all filters

Turn on FAN function until unit dries out completely

Turn off the unit and disconnect the power

Remove batteries from remote control

Maintenance – Pre-Season Inspection

After long periods of non-use, or before periods of frequent use, do the following:

Check for damaged wires

Clean all filters

Check for leaks

Make sure nothing is blocking all air inlets and outlets



Replace batteries

NOTE: Do not stretch or hang objects at the air outlet.
Do not adjust the automatic air deflector by hand or extend your hand into the air duct.
Do not cover the air inlet and outlet of the unit with objects.

TROUBLESHOOTING

⚠ CAUTION

If any of the following conditions occurs, turn off your unit immediately!

- The power cord is damaged or abnormally warm
- You smell a burning odor
- The unit emits loud or abnormal sounds
- A power fuse blows or the circuit breaker frequently trips
- Water or other objects fall into or out of the unit

DO NOT ATTEMPT TO FIX THESE YOURSELF! CONTACT AN AUTHORIZED SERVICE PROVIDER IMMEDIATELY.

Common Issues

The following problems are not a malfunction and in most situations will not require repairs.

Issue	Possible Causes
Unit does not turn on when pressing ON/OFF button	The Unit has a 3-minutes protection feature that prevents the unit from overloading. The unit cannot be restarted within three minutes of being turned off.
	Cooling and Heating Models: If the Operation light and PRE-DEF (Pre-heating/ Defrost) indicators are lit up, the outdoor temperature is too cold and the unit's anti-cold wind is activated in order to defrost the unit.
	In Cooling-only Models: If the "Fan Only" indicator is lit up, the outdoor temperature is too cold and the unit's anti-freeze protection is activated in order to defrost the unit.
The unit changes from COOL/HEAT mode to FAN mode	The unit may change its setting to prevent frost from forming on the unit. Once the temperature increases, the unit will start operating in the previously selected mode again.
	The set temperature has been reached, at which point the unit turns off the compressor. The unit will continue operating when the temperature fluctuates again.
The indoor unit emits white mist	In humid regions, a large temperature difference between the room's air and the conditioned air can cause white mist.
Both the indoor and outdoor units emit white mist	When the unit restarts in HEAT mode after defrosting, white mist may be emitted due to moisture generated from the defrosting process.
The indoor unit makes noises	A squeaking sound is heard when the system is OFF or in COOL mode. The noise is also heard when the drain pump (optional) is in operation.
	A squeaking sound may occur after running the unit in HEAT mode due to expansion and contraction of the unit's plastic parts.
Both the indoor unit and outdoor unit make noises	Low hissing sound during operation: This is normal and is caused by refrigerant gas flowing through both indoor and outdoor units.
	Low hissing sound when the system starts, has just stopped running, or is defrosting: This noise is normal and is caused by the refrigerant gas stopping or changing direction.
	Squeaking sound: Normal expansion and contraction of plastic and metal parts caused by temperature changes during operation can cause squeaking noises.

Issue	Possible Causes
The outdoor unit makes noises	The unit will make different sounds based on its current operating mode.
Dust is emitted from either the indoor or outdoor unit	The unit may accumulate dust during extended periods of non-use, which will be emitted when the unit is turned on. This can be mitigated by covering the unit during long periods of inactivity.
The unit emits a bad odor	The unit may absorb odors from the environment (such as furniture, cooking, cigarettes, etc.) which will be emitted during operations.
	The unit's filters have become moldy and should be cleaned.
The fan of the outdoor unit does not operate	During operation, the fan speed is controlled to optimize product operation.

NOTE
If problem persists, contact a local dealer or your nearest customer service center. Provide them with a detailed description of the unit malfunction as well as your model number.

Troubleshooting

When troubles occur, please check the following points before contacting a repair company.

Problem	Possible Causes	Solution
Poor Cooling Performance	Temperature setting may be higher than ambient room temperature	Lower the temperature setting
	The heat exchanger on the indoor or outdoor unit is dirty	Clean the affected heat exchanger
	The air filter is dirty	Remove the filter and clean it according to instructions
	The air inlet or outlet of either unit is blocked	Turn the unit off, remove the obstruction and turn it back on
	Doors and windows are open	Make sure that all doors and windows are closed while operating the unit
	Excessive heat is generated by sunlight	Close windows and curtains during periods of high heat or bright sunshine
	Too many sources of heat in the room (people, computers, electronics, etc.)	Reduce amount of heat sources
	Low refrigerant due to leak or long-term use	Check for leaks, re-seal if necessary and top off refrigerant

Problem	Possible Causes	Solution
The unit is not working	Power failure	Wait for the power to be restored
	The power is turned off	Turn on the power
	The fuse is burned out	Replace the fuse
	Remote control batteries are dead	Replace batteries
	The Unit's 3-minute protection has been activated	Wait three minutes after restarting the unit
	Timer is activated	Turn timer off
The unit starts and stops frequently	There's too much or too little refrigerant in the system	Check for leaks and recharge the system with refrigerant.
	Incompressible gas or moisture has entered the system.	Evacuate and recharge the system with refrigerant
	System circuit is blocked	Determine which circuit is blocked and replace the malfunctioning piece of equipment
	The compressor is broken	Replace the compressor
	The voltage is too high or too low	Install a manostat to regulate the voltage
Poor heating performance	The outdoor temperature isextremely low	Use auxiliary heating device
	Cold air is entering through doors and windows	Make sure that all doors and windows are closed during use
	Low refrigerant due to leak or long-term use	Check for leaks, re-seal if necessary and top off refrigerant
Indicator lamps continue flashing	The unit may stop operation or continue to run safely. If the indicator lamps continue to flash or error codes appear, wait for about 10 minutes. The problem may resolve itself. If not, disconnect the power, then connect it again. Turn the unit on. If the problem persists, disconnect the power and contact your nearest customer service center.	
Error code appears and begins with the letters as the following in the window display of indoor unit: • **E(x), P(x), F(x)** • **EH(xx), EL(xx), EC(xx)** • **PH(xx), PL(xx), PC(xx)**		

NOTE: If your problem persists after performing the checks and diagnostics above, turn off your unit immediately and contact an authorized service center.

The design and specifications are subject to change without prior notice for product improvement. Consult with the sales agency or manufacturer for details. Any updates to the manual will be uploaded to the service website, please check for the latest version.

The design and specifications are subject to change without prior notice for product improvement. Consult with the sales agency or manufacturer for details. Any updates to the manual will be uploaded to the service website, please check for the latest version.

QS002U-CONSOLE(R454B)
16122000A79154